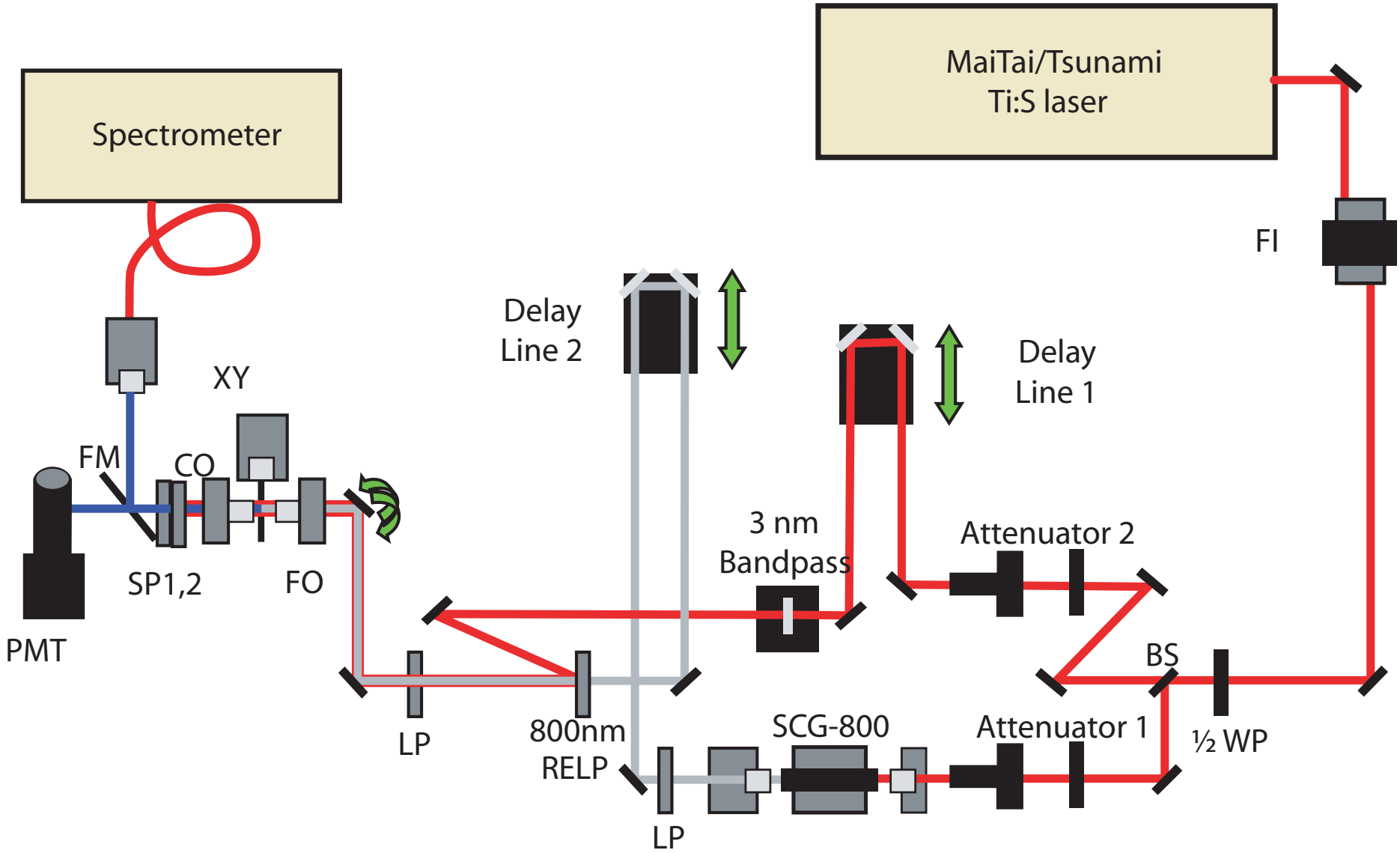
Spectrometer
MaiTai/Tsunami
Ti:S laser
FI
Delay
Line 2
Delay
Line 1
XY
FM
CO
SP1,2
FO
PMT
3 nm
Bandpass
Attenuator 2
BS
LP
800nm
RELP
SCG-800
Attenuator 1
½ WP
LP