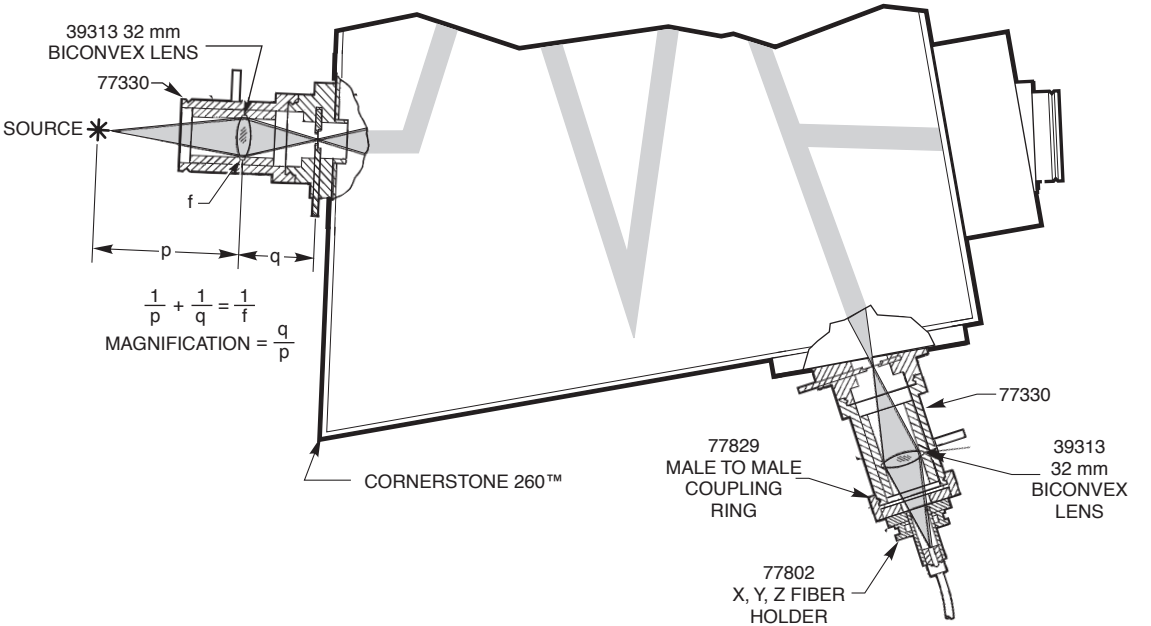
39313 32 mm
BICONVEX LENS
77330
SOURCE
f
p
q
$\frac{1}{p} + \frac{1}{q} = \frac{1}{f}$
MAGNIFICATION = $\frac{q}{p}$
CORNERSTONE 260™
77330
77829
MALE TO MALE
COUPLING
RING
39313
32 mm
BICONVEX
LENS
77802
X, Y, Z FIBER
HOLDER