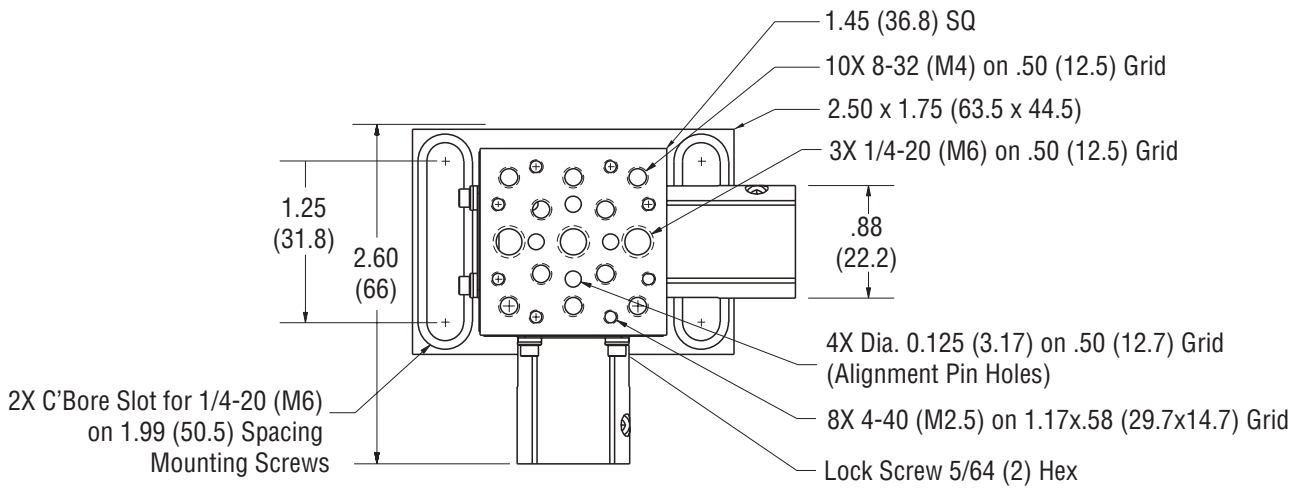
1.45 (36.8) SQ
10X 8-32 (M4) on .50 (12.5) Grid
2.50 x 1.75 (63.5 x 44.5)
3X 1/4-20 (M6) on .50 (12.5) Grid
1.25
(31.8)
2.60
(66)
.88
(22.2)
4X Dia. 0.125 (3.17) on .50 (12.7) Grid
(Alignment Pin Holes)
2X C'Bore Slot for 1/4-20 (M6)
on 1.99 (50.5) Spacing
Mounting Screws
8X 4-40 (M2.5) on 1.17x.58 (29.7x14.7) Grid
Lock Screw 5/64 (2) Hex

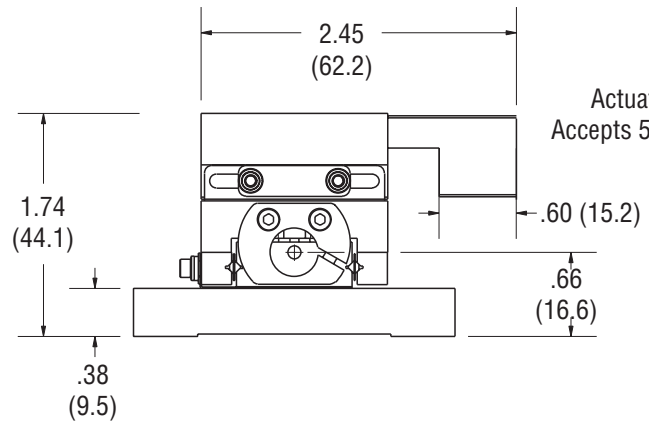
2.45
(62.2)
1.74
(44.1)
.60 (15.2)
.66
(16.6)
.38
(9.5)

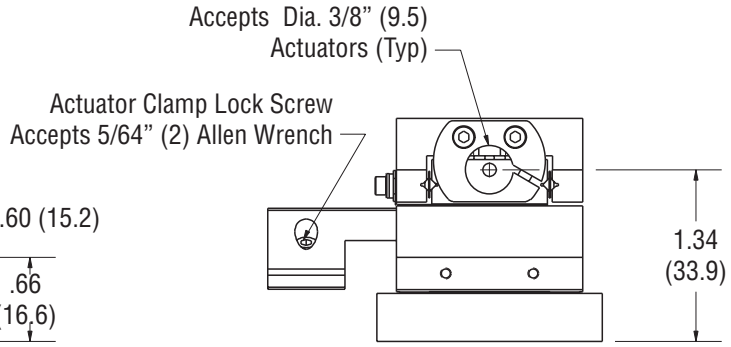
Accepts Dia. 3/8" (9.5)
Actuators (Typ)
Actuator Clamp Lock Screw
Accepts 5/64" (2) Allen Wrench
1.34
(33.9)

New Focus™