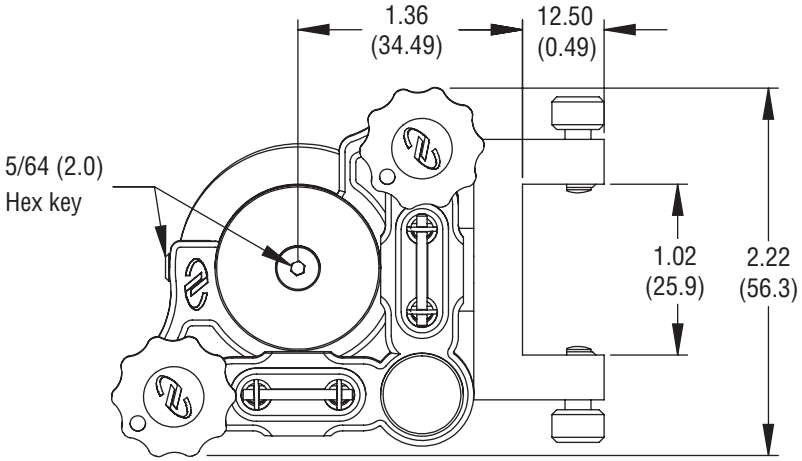
1.36
(34.49)
12.50
(0.49)
5/64 (2.0)
Hex key
1.02
(25.9)
2.22
(56.3)

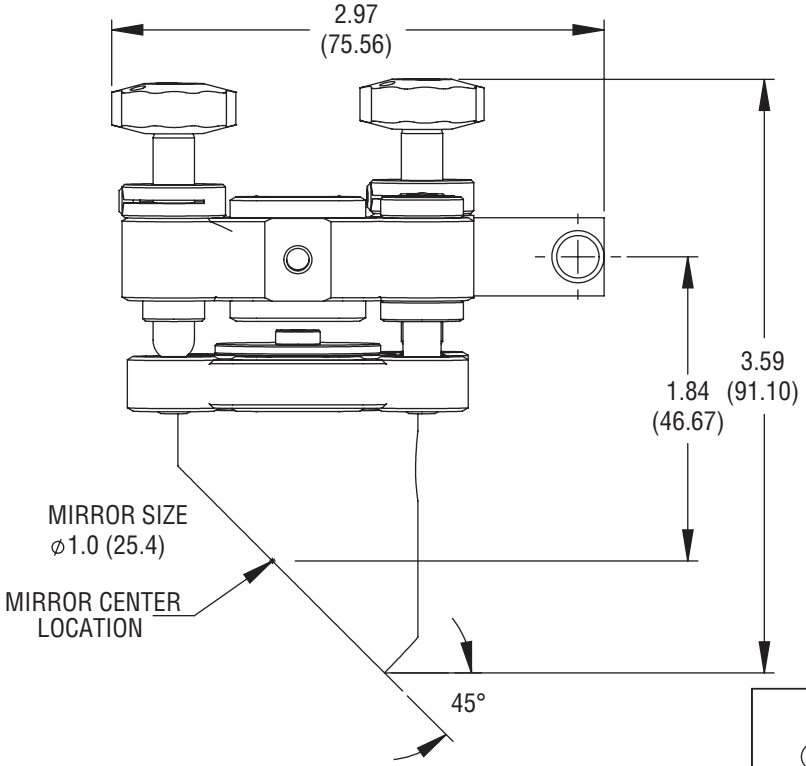
2.97
(75.56)
1.84
(46.67)
3.59
(91.10)
MIRROR SIZE
⌀1.0 (25.4)
MIRROR CENTER
LOCATION
45°

Newport