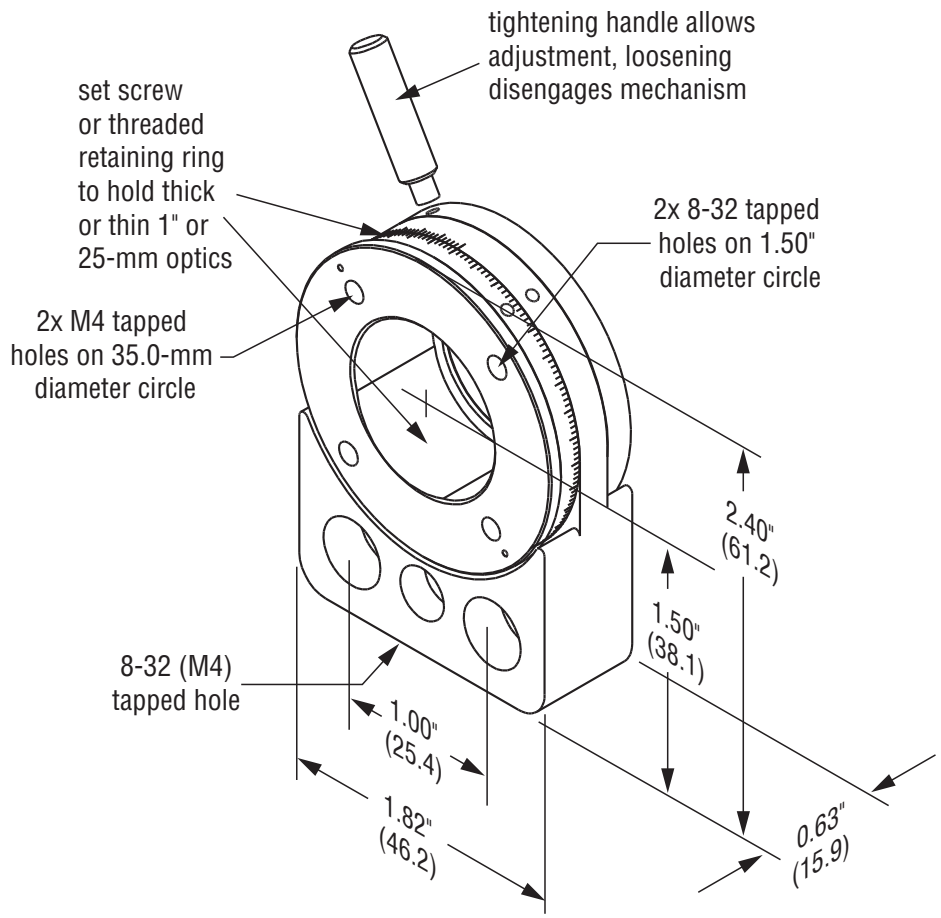
tightening handle allows adjustment, loosening disengages mechanism
set screw or threaded retaining ring to hold thick or thin 1" or 25-mm optics
2x 8-32 tapped holes on 1.50" diameter circle
2x M4 tapped holes on 35.0-mm diameter circle
2.40" (61.2)
1.50" (38.1)
8-32 (M4) tapped hole
1.00" (25.4)
1.82" (46.2)
0.63" (15.9)

New Focus™