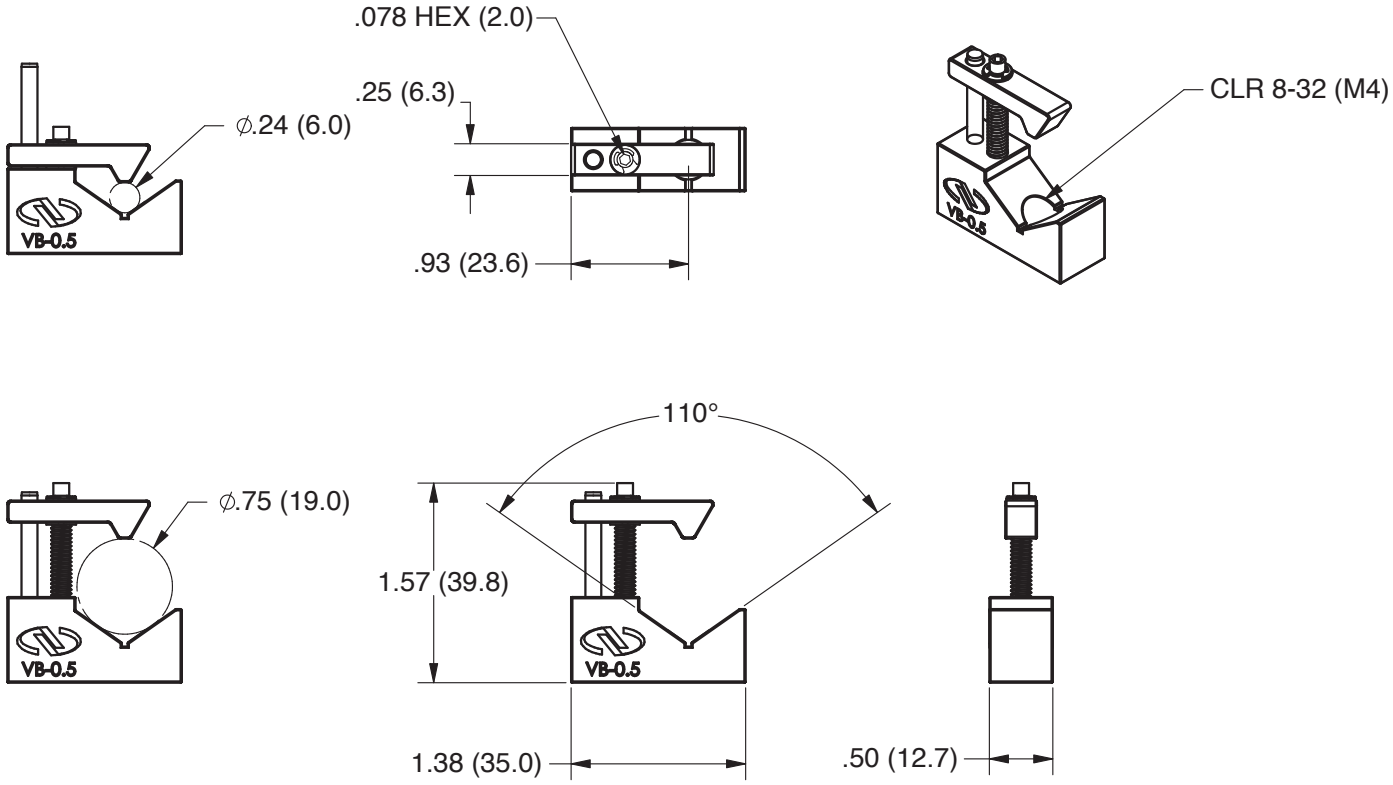
.078 HEX (2.0)
.25 (6.3)
ϕ.24 (6.0)
.93 (23.6)
CLR 8-32 (M4)
VB-0.5
110°
ϕ.75 (19.0)
1.57 (39.8)
1.38 (35.0)
.50 (12.7)

Newport