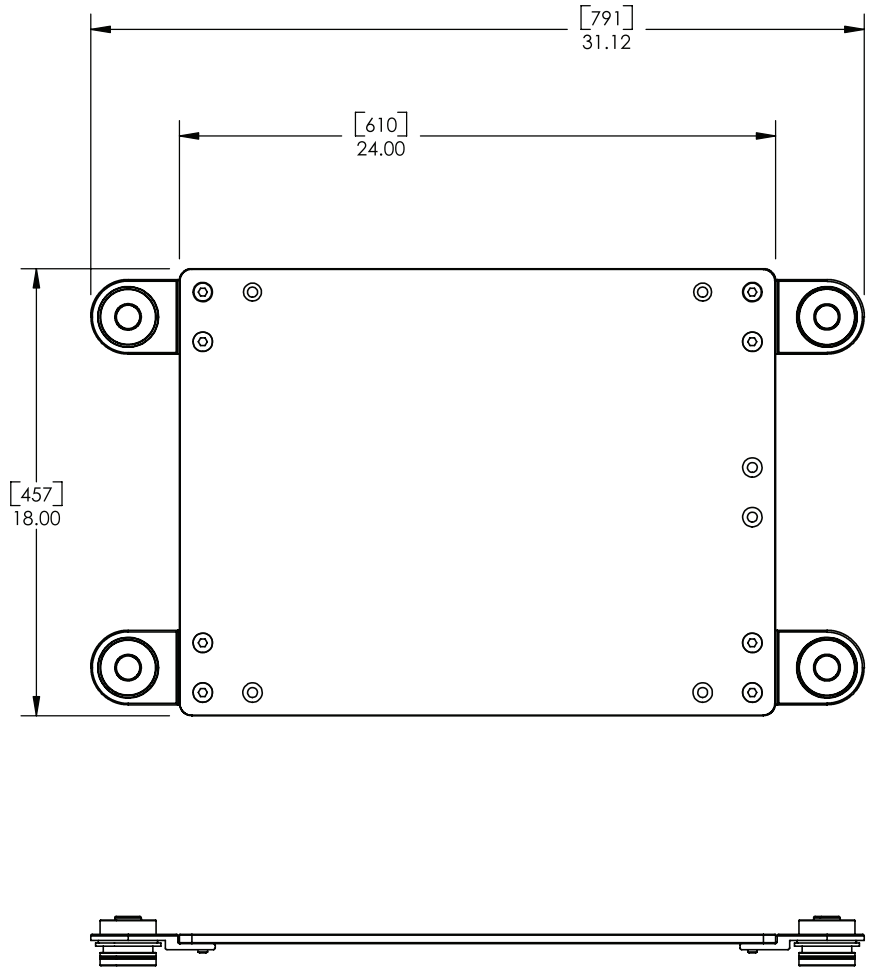
[791]
31.12
[610]
24.00
[457]
18.00

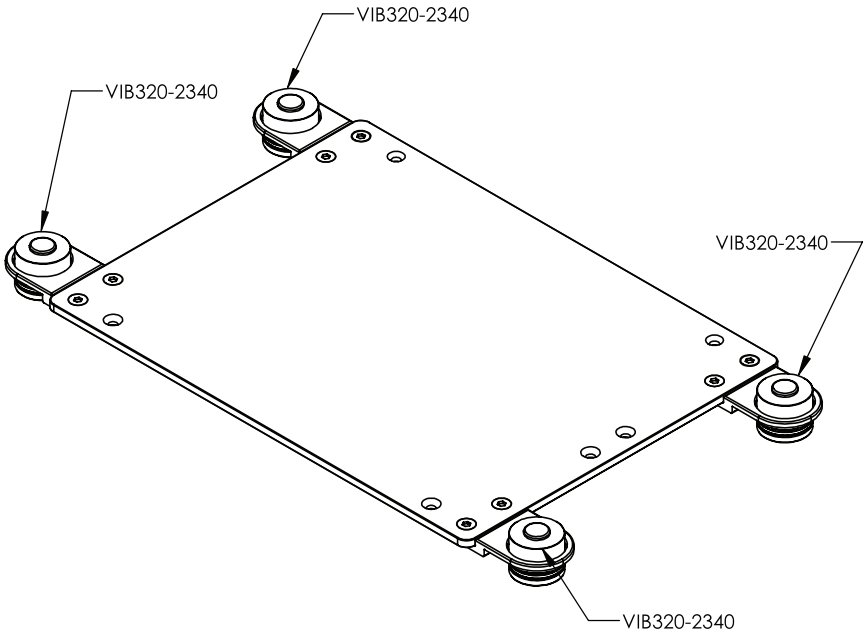
VIB320-2340
VIB320-2340
VIB320-2340
VIB320-2340

Newport®