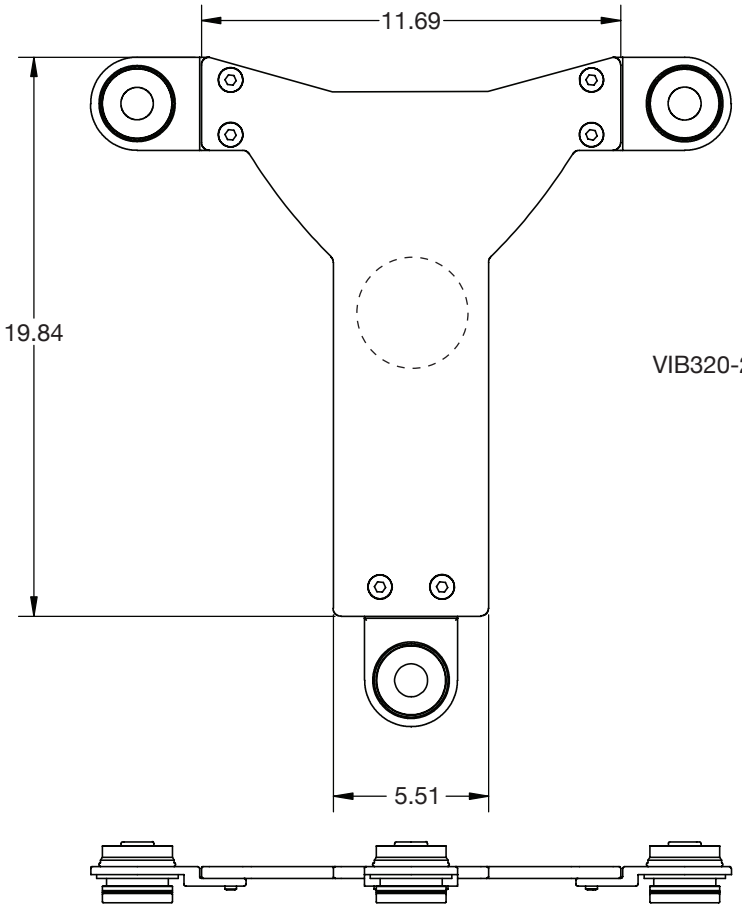

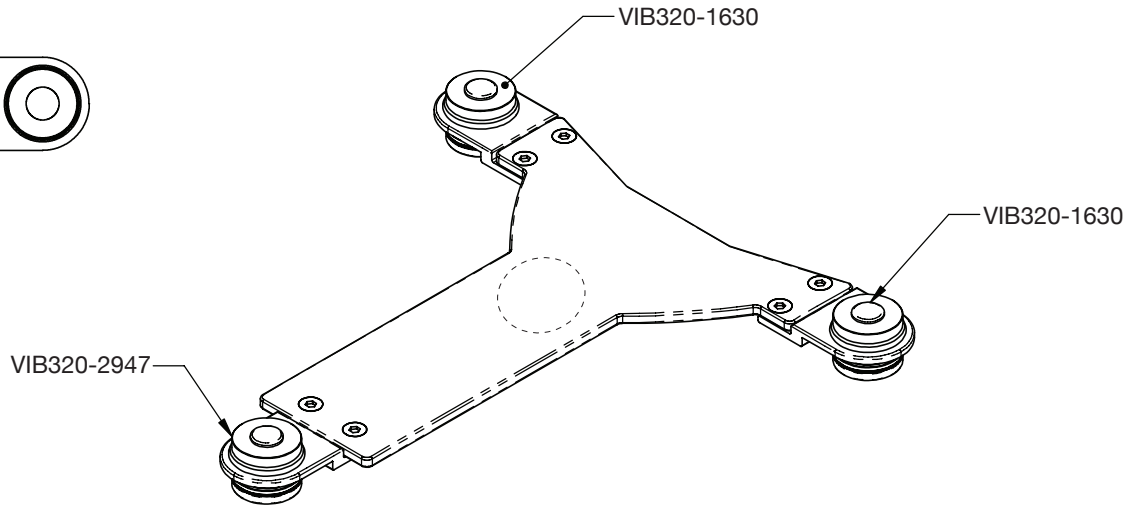

Newport®