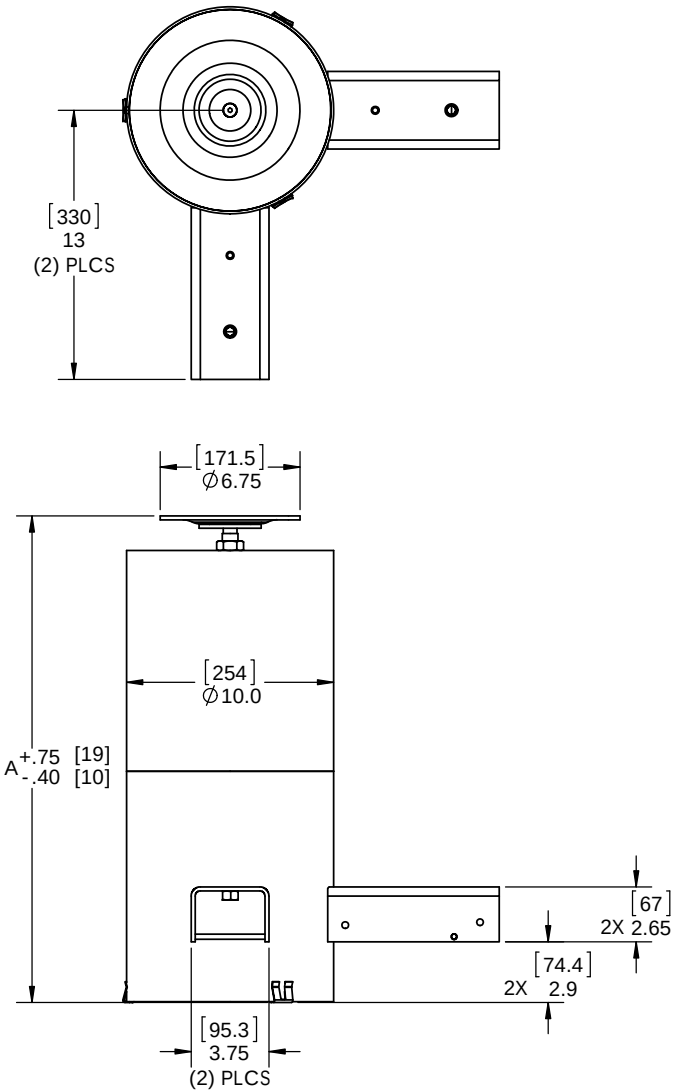

Part Number	H in. [mm]	Number of Isolators
RL-2000-410TC	10.0 [254]	4
RL-2000-419.5TC	19.5 [495]	4
RL-2000-422TC	22.0 [559]	4
RL-2000-423.5TC	23.5 [597]	4
RL-2000-428TC	28.0 [711]	4

Newport