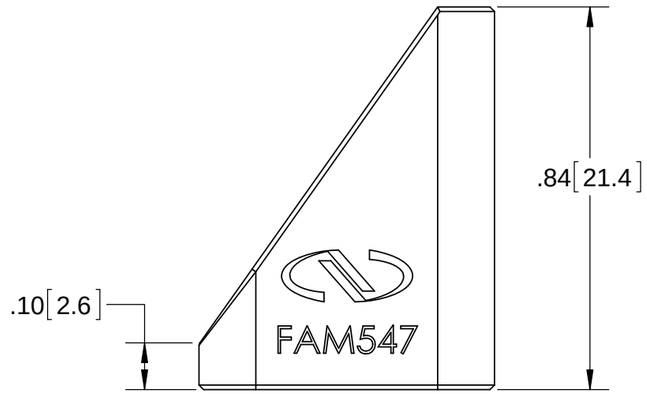

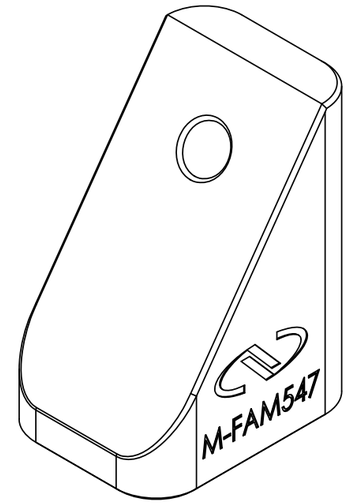

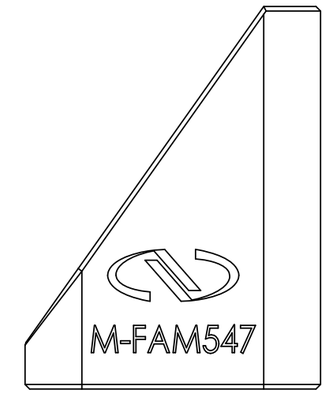

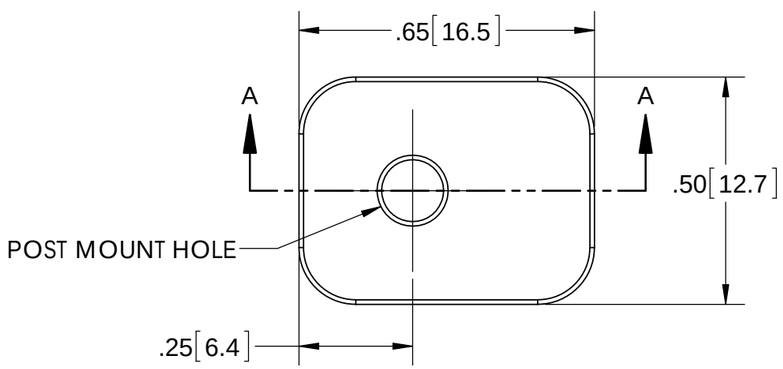

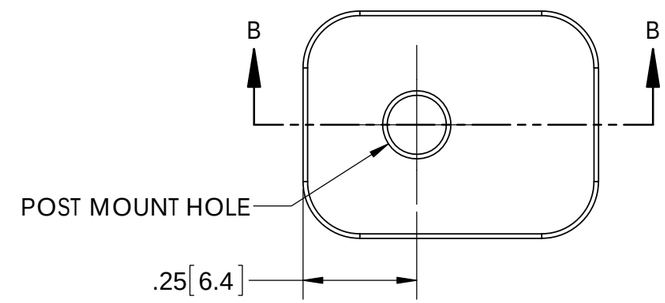

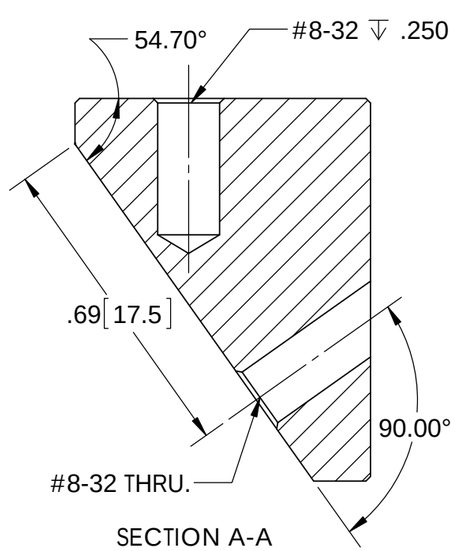

SECTION A-A

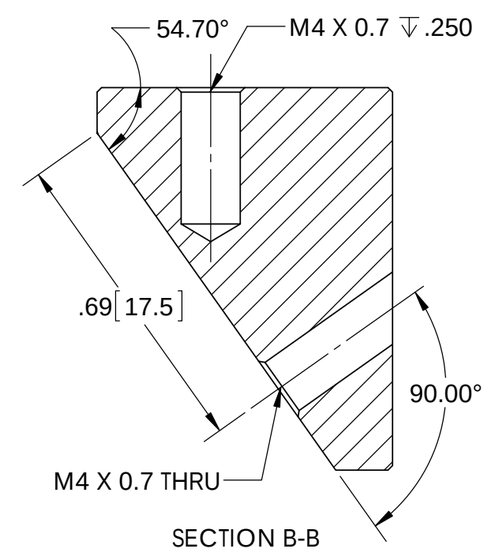

SECTION B-B

Newport®
Experience | Solutions