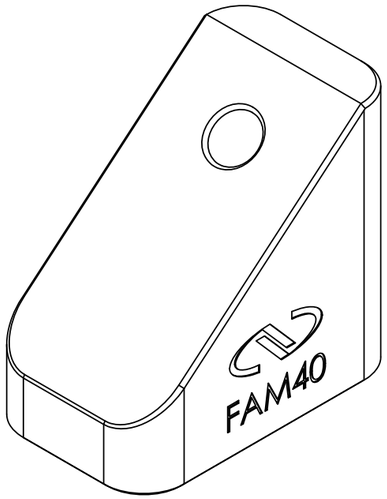

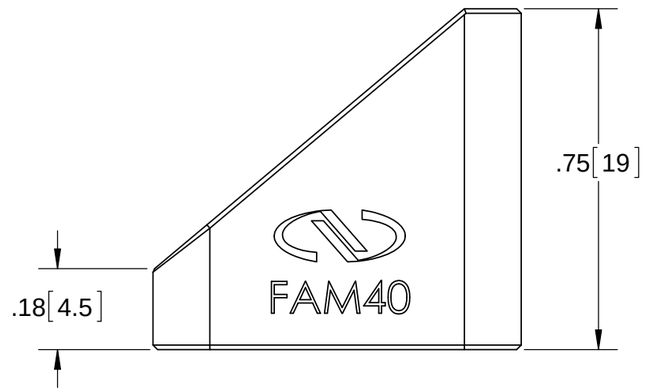

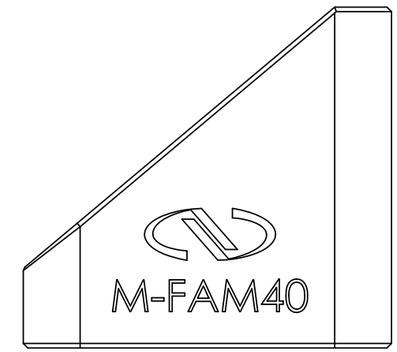

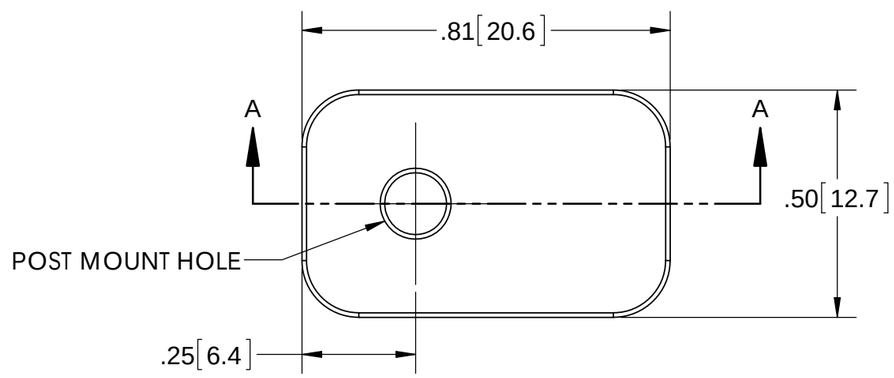

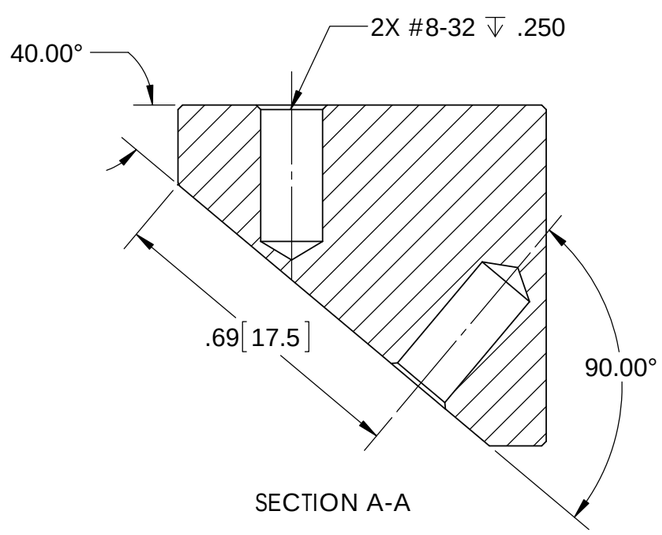

SECTION A-A

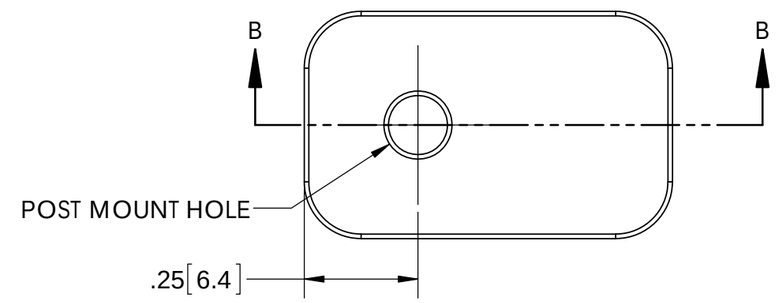

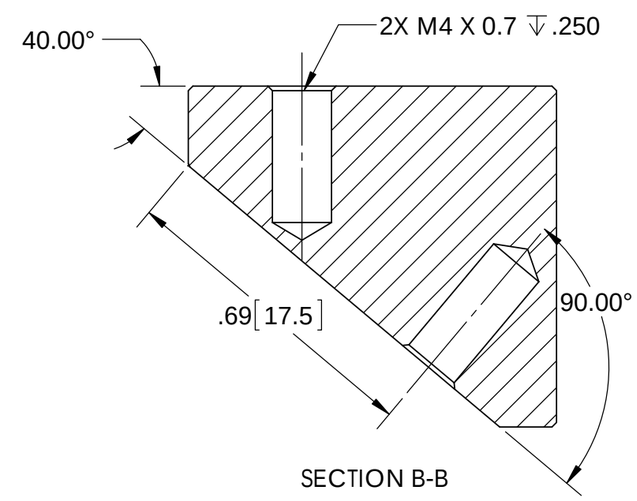

SECTION B-B

Newport®
Experience | Solutions