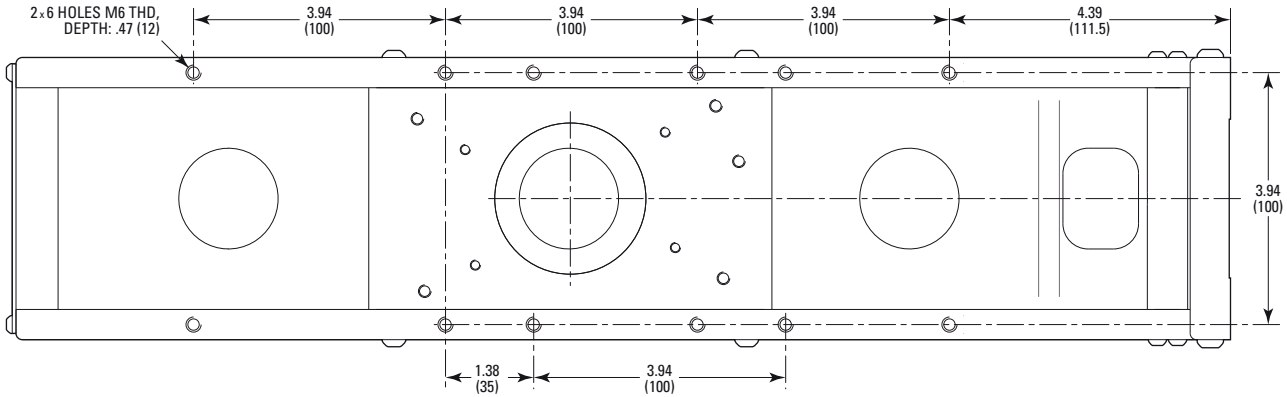

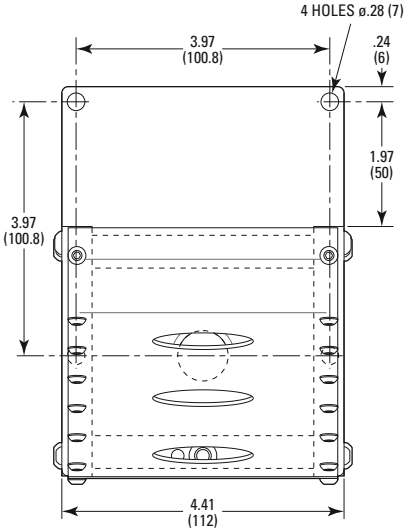

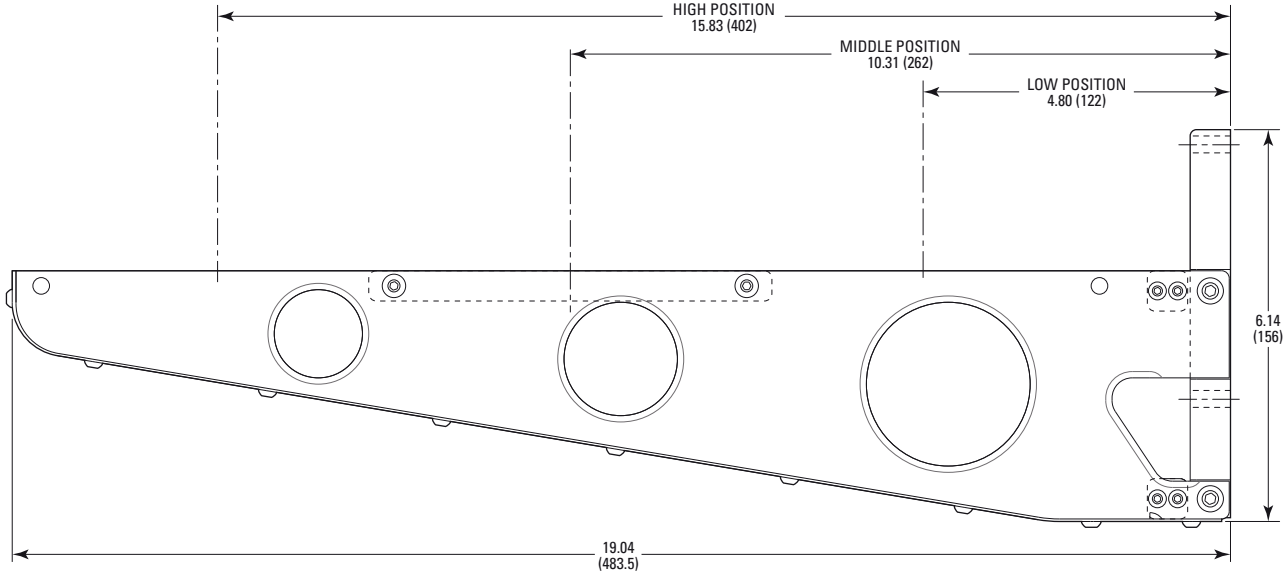

INERFACE PLATE

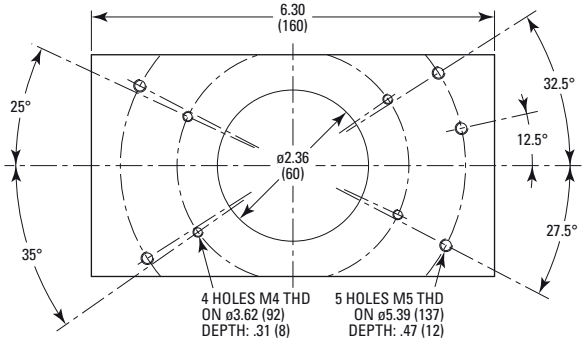

MODEL SHOWN: EQ120

DIMENSIONS IN INCHES (AND MILLIMETERS)

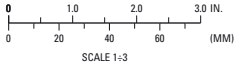

SCALE 1=3

Newport