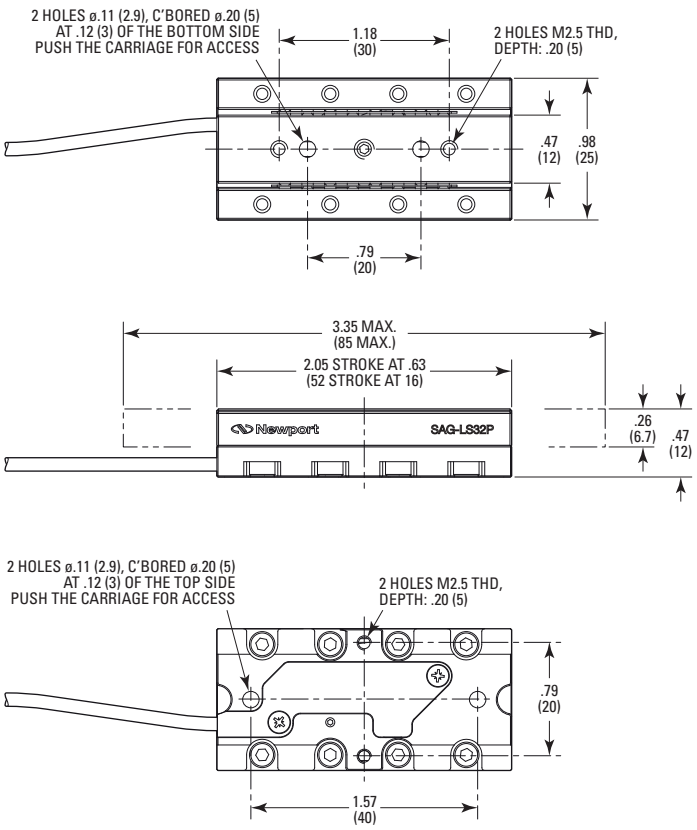

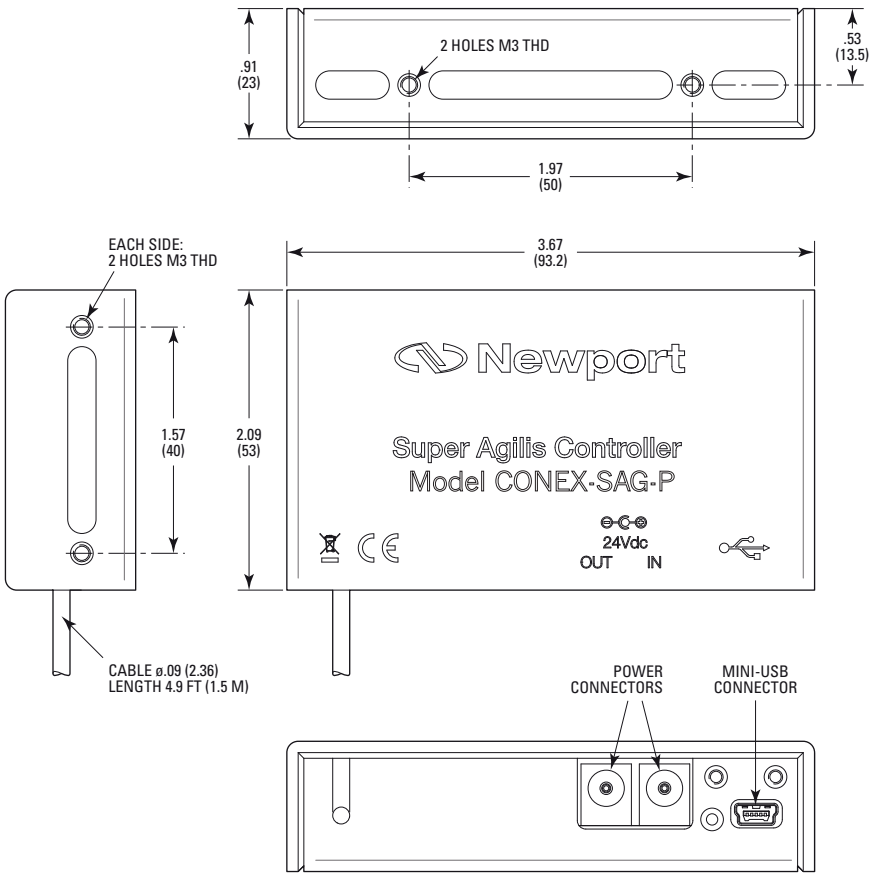

MODEL SHOWN: CONEX-SAG-LS32P

DIMENSIONS IN INCHES (AND MILLIMETERS)

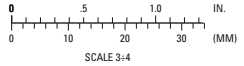

SCALE 3:4

Newport