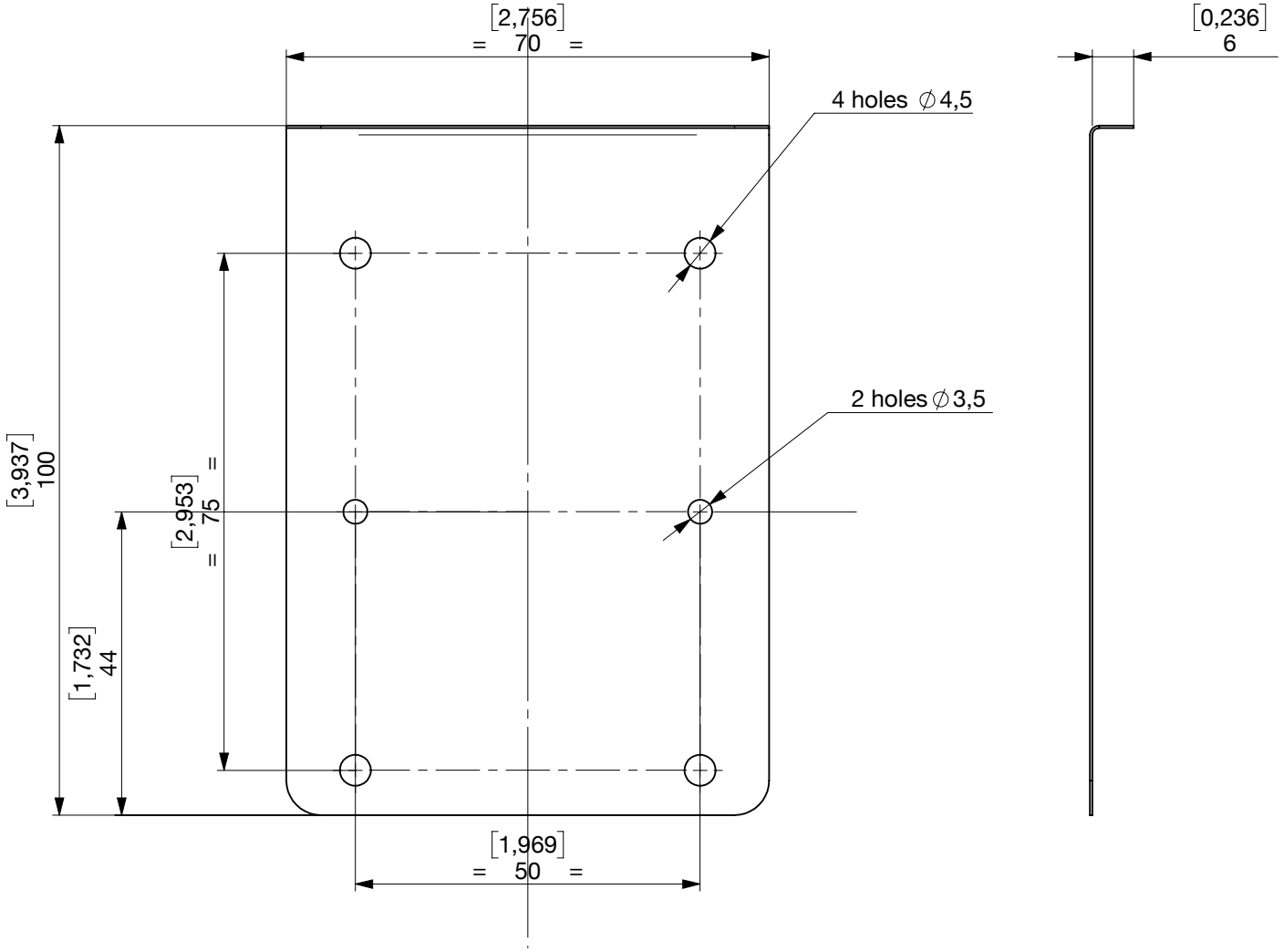
[2,756]
= 70 =
[0,236]
6
4 holes ∅4,5
2 holes ∅3,5
[3,937]
100
[2,953]
= 75 =
[1,732]
44
[1,969]
= 50 =

Newport