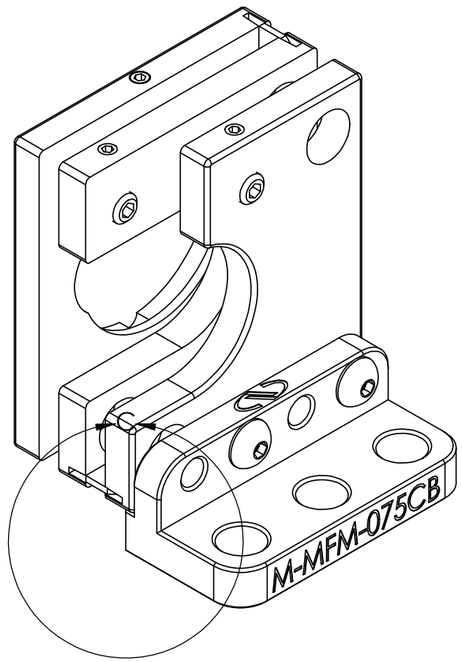

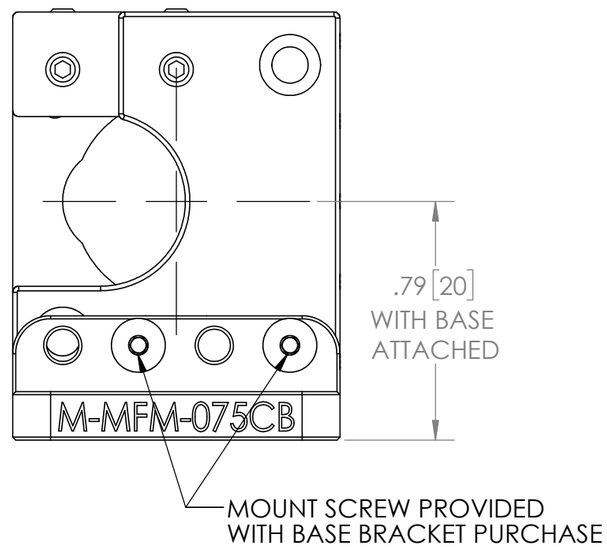

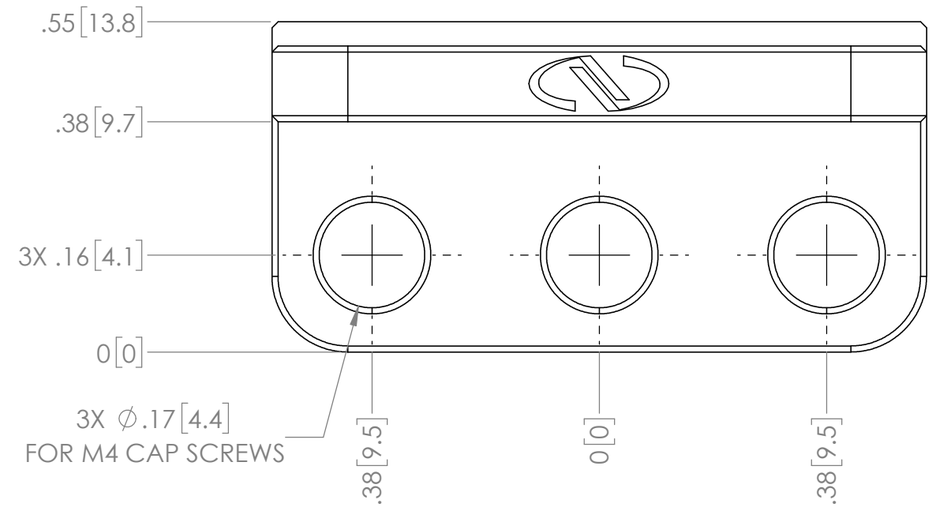

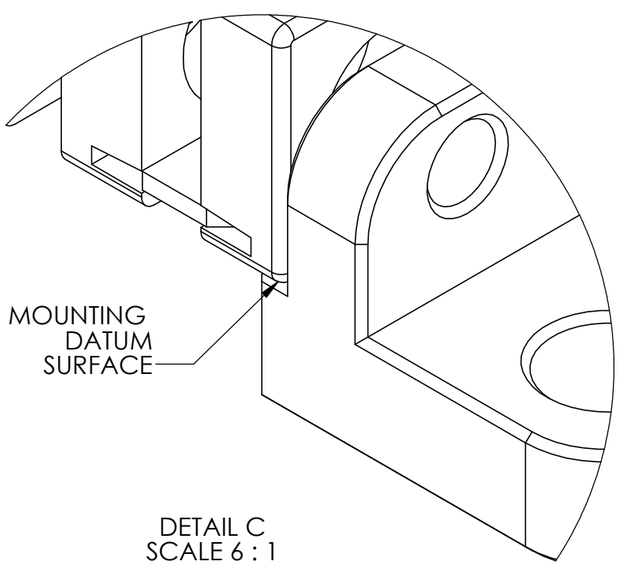

DETAIL C
SCALE 6 : 1

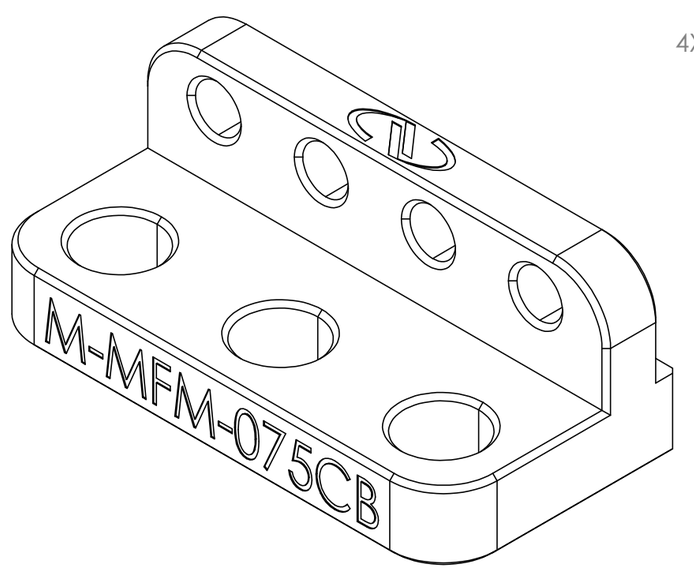

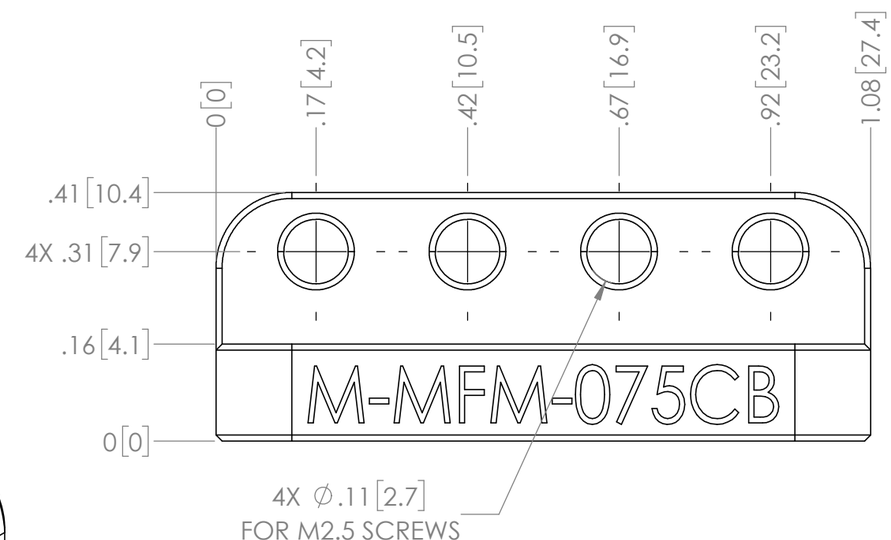

Newport®
Experience | Solutions