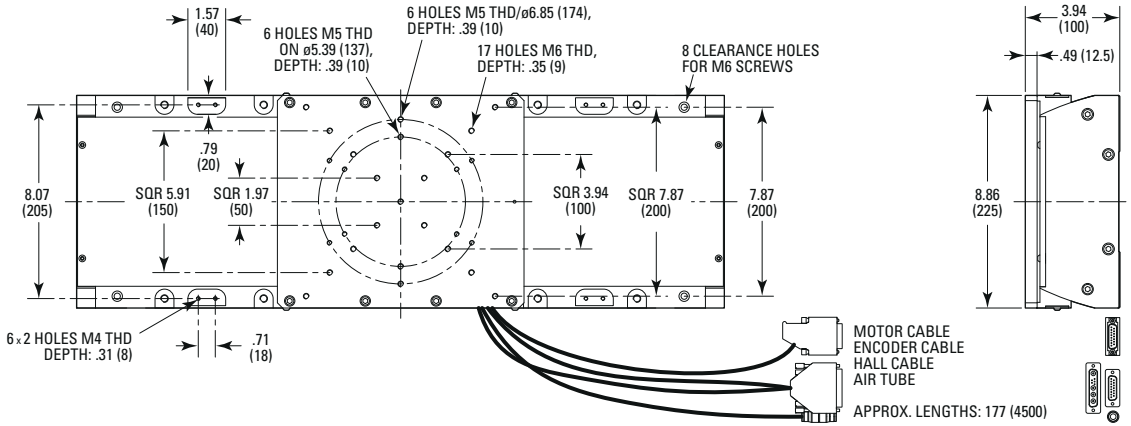

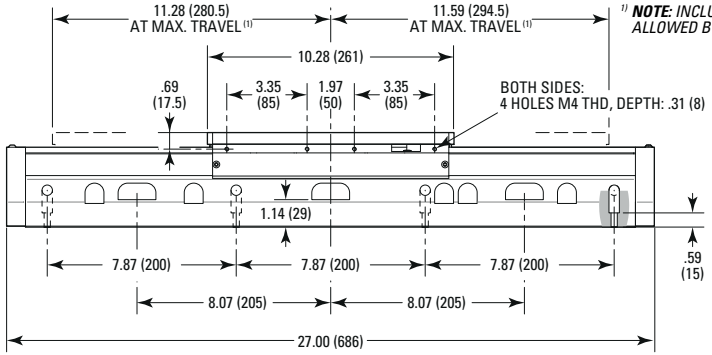

1) ***NOTE:*** *INCLUDING OVER-TRAVEL ALLOWED BY THE HARD STOP.*

MODEL SHOWN: IDL225-300LM

DIMENSIONS IN INCHES (AND MILLIMETERS)

0 1 2 3 4 5 IN.

0 50 100 (MM)

Newport