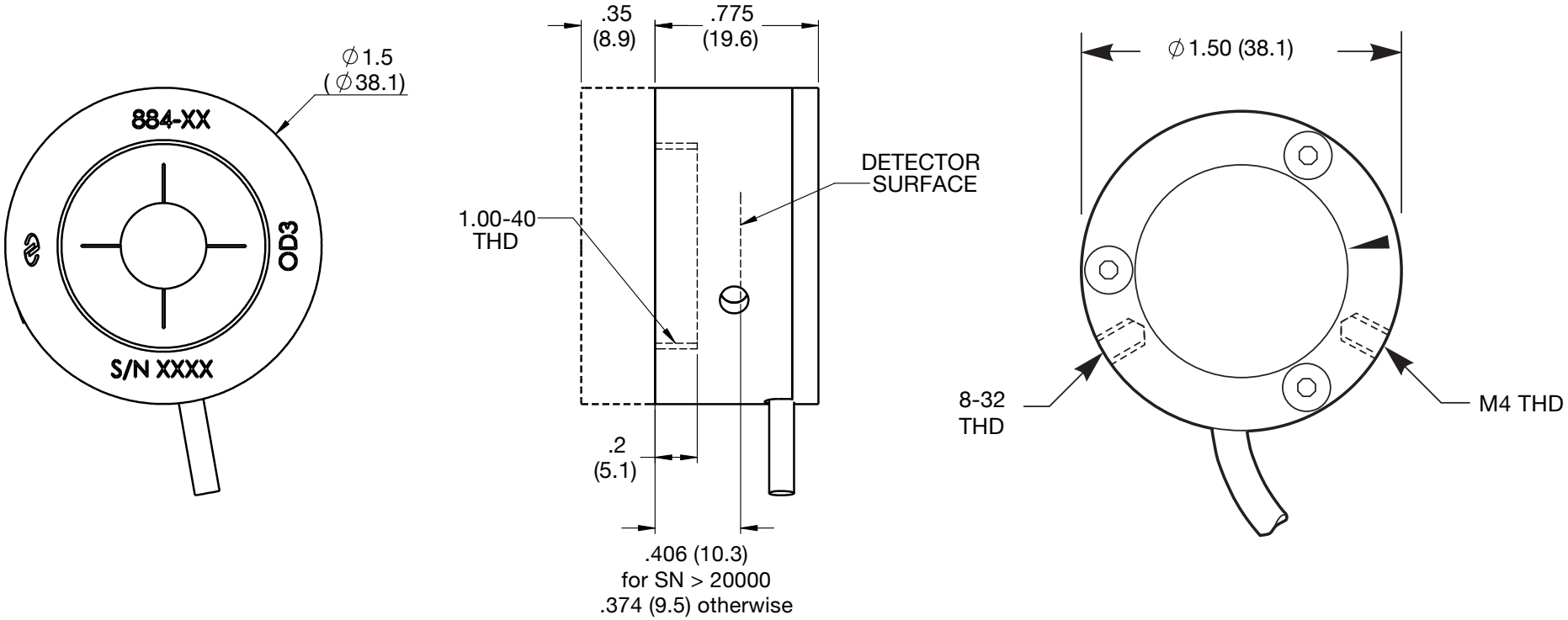
884-XX
OD3
S/N XXXX
∅1.5
(∅38.1)
.35
(8.9)
.775
(19.6)
1.00-40
THD
DETECTOR
SURFACE
.2
(5.1)
.406 (10.3)
for SN > 20000
.374 (9.5) otherwise
∅1.50 (38.1)
8-32
THD
M4 THD

Newport