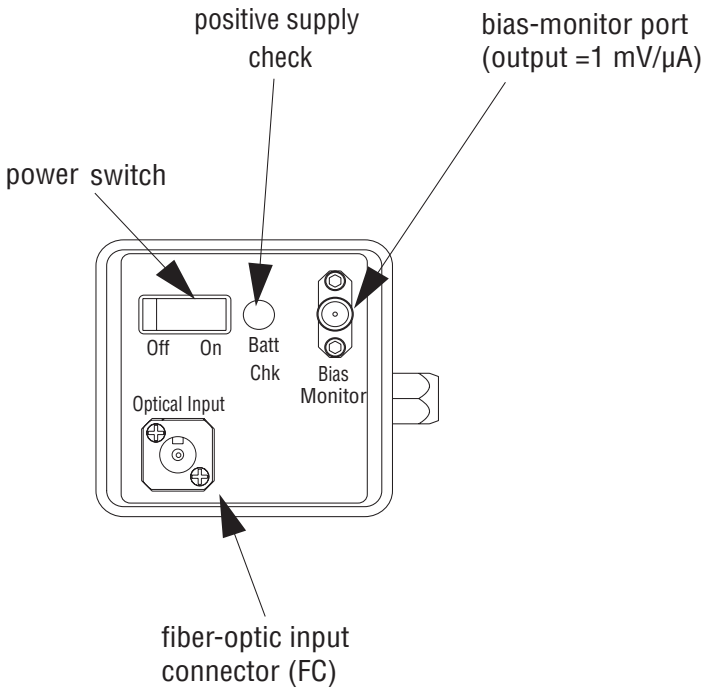
positive supply
check
bias-monitor port
(output =1 mV/µA)
power switch
Off
On
Batt
Chk
Bias
Monitor
Optical Input
fiber-optic input
connector (FC)

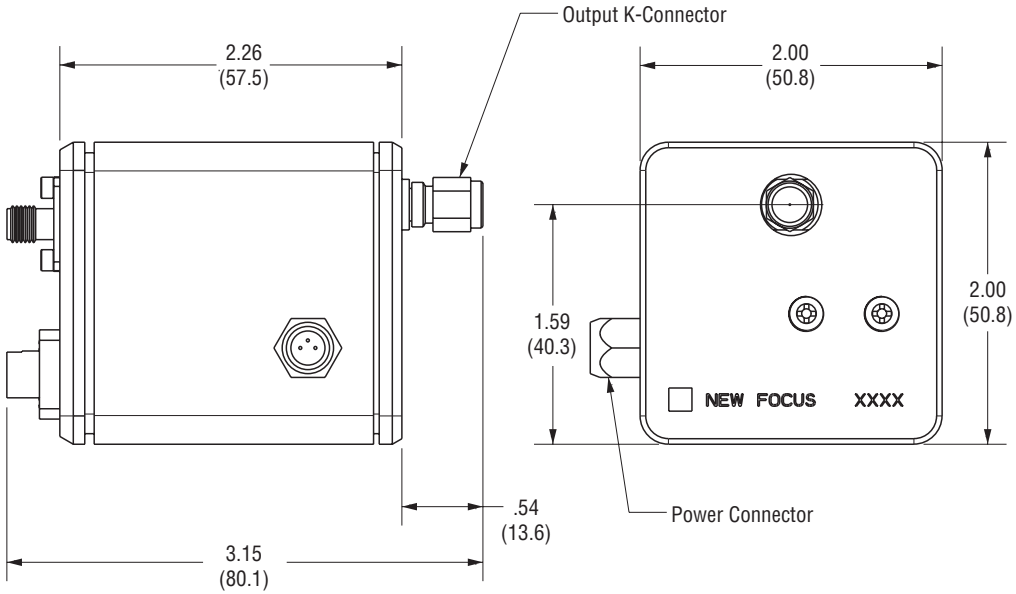
Output K-Connector
2.26
(57.5)
2.00
(50.8)
1.59
(40.3)
2.00
(50.8)
NEW FOCUS
XXXX
.54
(13.6)
Power Connector
3.15
(80.1)

Newport