MODEL SHOWN: M-ILS100CC/CCL

DIMENSIONS IN INCHES (AND MILLIMETERS)

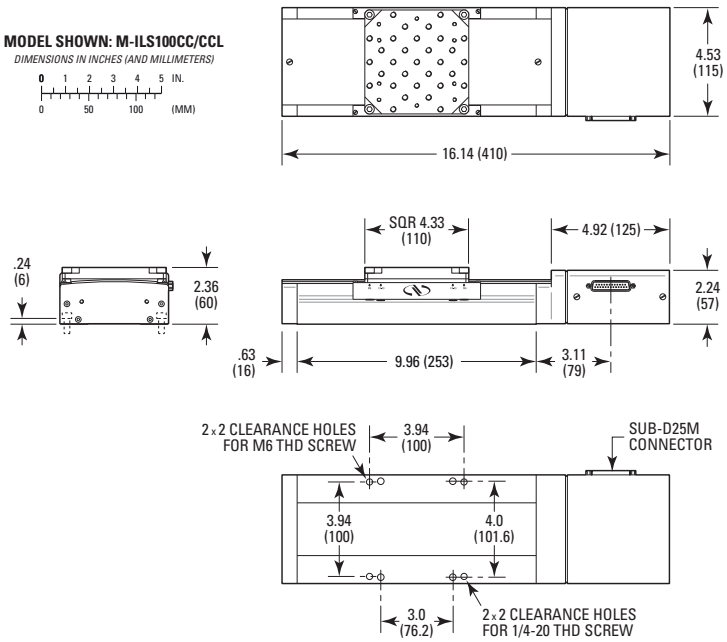

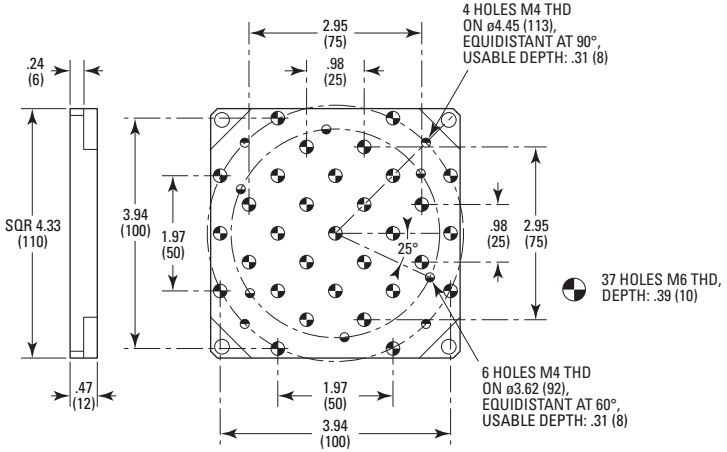

Newport