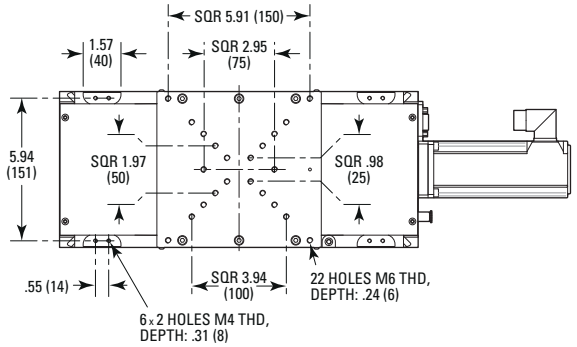

MODEL SHOWN: IDL165-150BL

DIMENSIONS IN INCHES (AND MILLIMETERS)

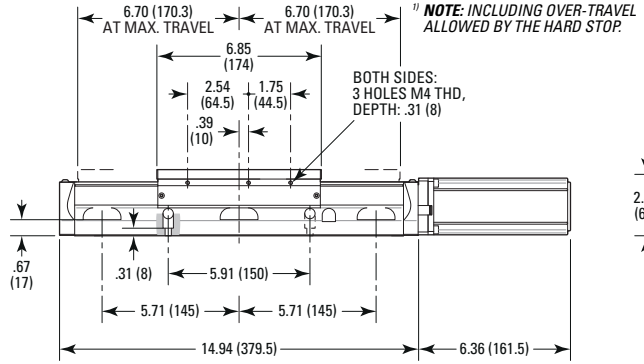

[1] ***NOTE:*** *INCLUDING OVER-TRAVEL ALLOWED BY THE HARD STOP.*

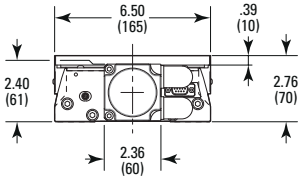

Newport