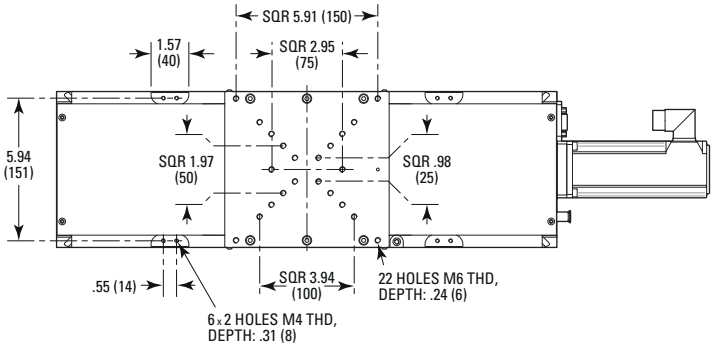

MODEL SHOWN: IDL165-300BL

DIMENSIONS IN INCHES (AND MILLIMETERS)

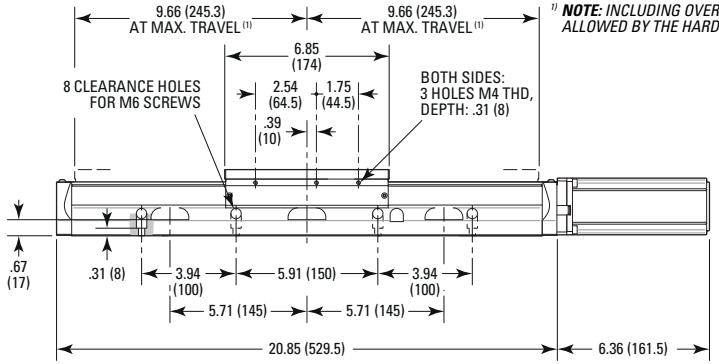

1) ***NOTE:*** *INCLUDING OVER-TRAVEL ALLOWED BY THE HARD STOP.*

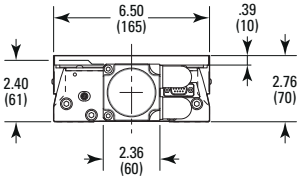

Newport