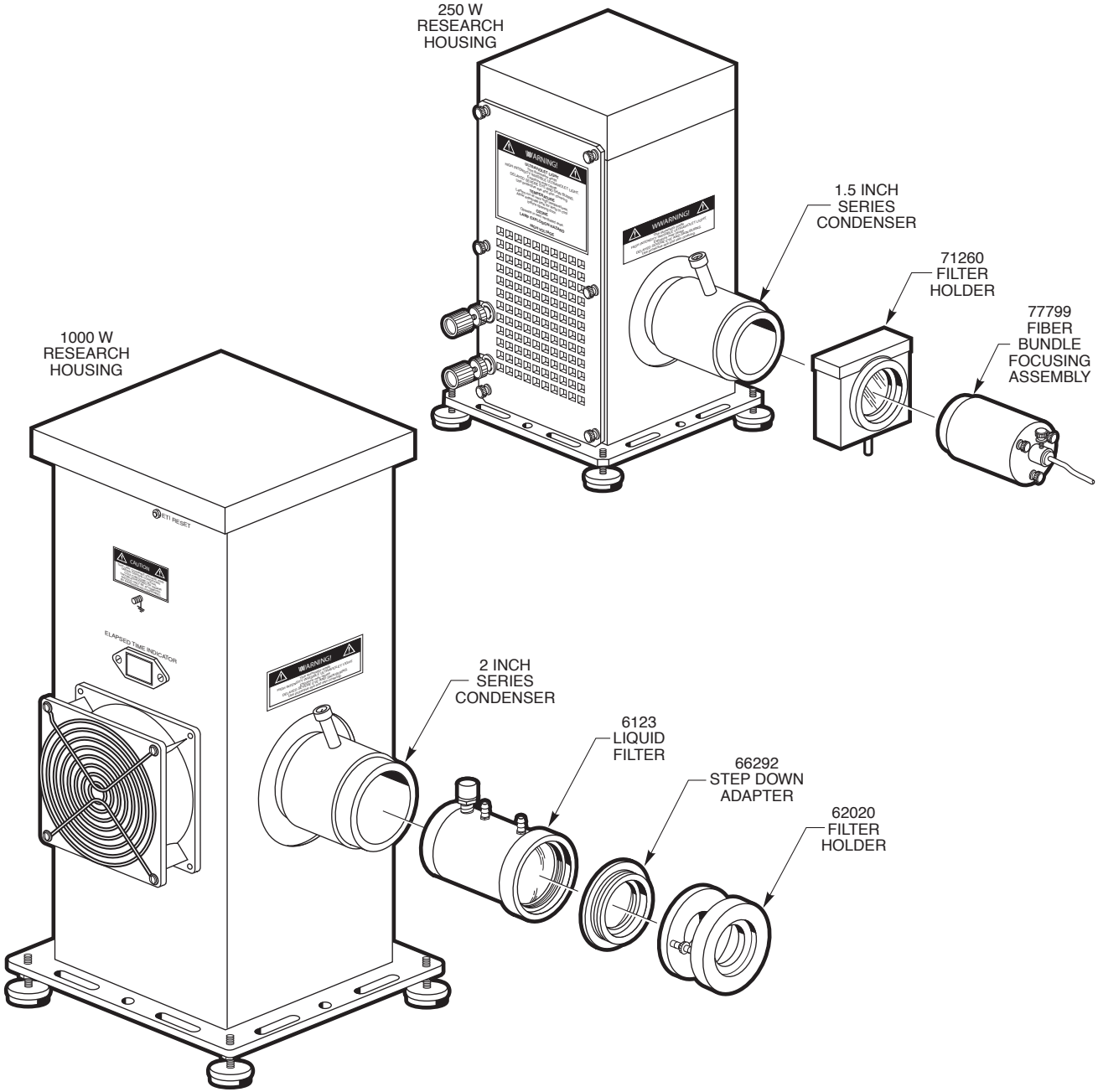
250 W
RESEARCH
HOUSING
1.5 INCH
SERIES
CONDENSER
71260
FILTER
HOLDER
77799
FIBER
BUNDLE
FOCUSING
ASSEMBLY
1000 W
RESEARCH
HOUSING
ETI RESET
CAUTION
ELAPSED TIME INDICATOR
WARNING!
2 INCH
SERIES
CONDENSER
6123
LIQUID
FILTER
66292
STEP DOWN
ADAPTER
62020
FILTER
HOLDER