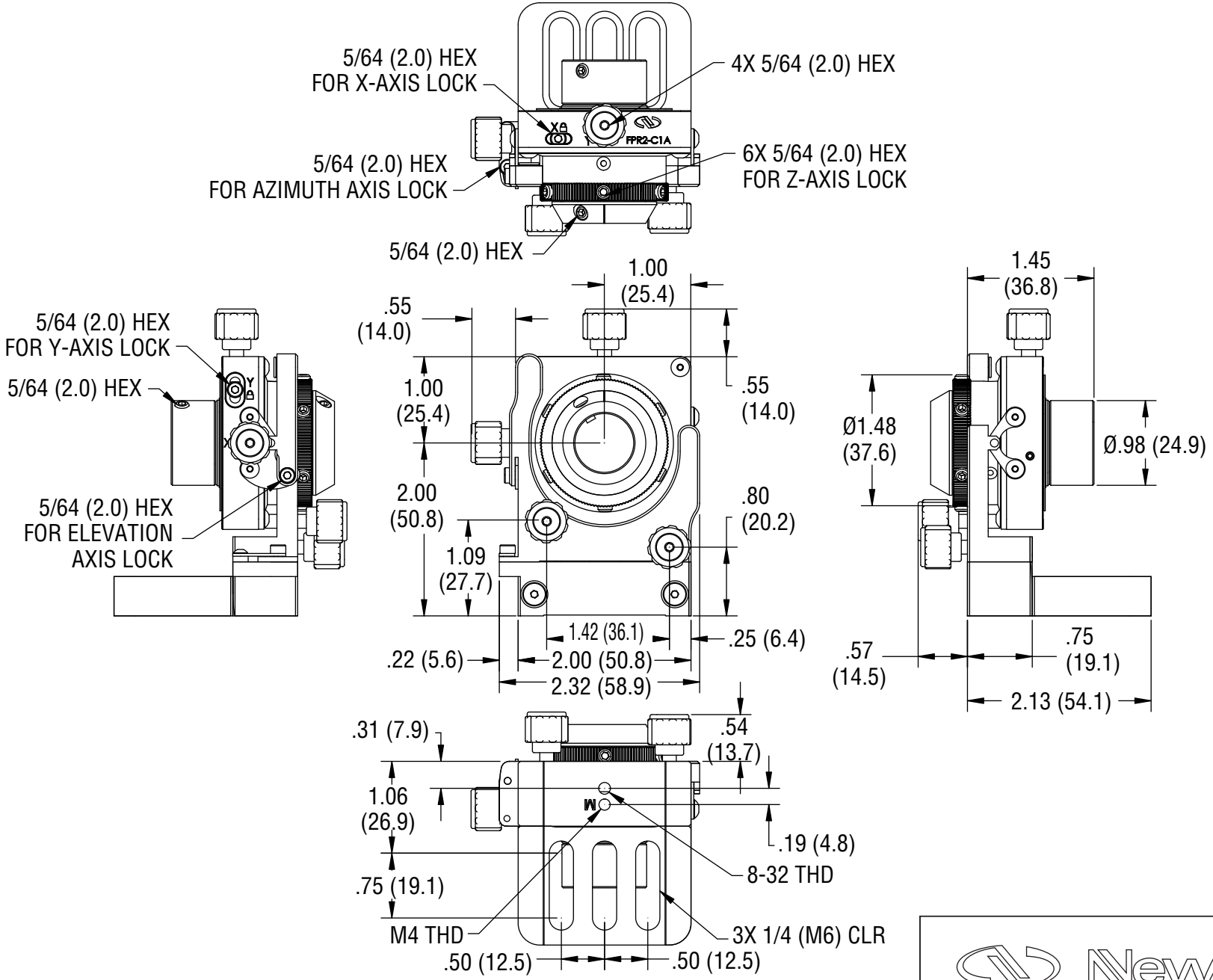
5/64 (2.0) HEX
FOR X-AXIS LOCK
4X 5/64 (2.0) HEX
FPR2-C1A
5/64 (2.0) HEX
FOR AZIMUTH AXIS LOCK
6X 5/64 (2.0) HEX
FOR Z-AXIS LOCK
5/64 (2.0) HEX
5/64 (2.0) HEX
FOR Y-AXIS LOCK
5/64 (2.0) HEX
5/64 (2.0) HEX
FOR ELEVATION
AXIS LOCK
1.00
(25.4)
.55
(14.0)
.55
(14.0)
1.00
(25.4)
2.00
(50.8)
.80
(20.2)
1.09
(27.7)
1.42 (36.1)
.25 (6.4)
.22 (5.6)
2.00 (50.8)
2.32 (58.9)
1.45
(36.8)
Ø1.48
(37.6)
Ø.98 (24.9)
.57
(14.5)
.75
(19.1)
2.13 (54.1)
.31 (7.9)
.54
(13.7)
1.06
(26.9)
.19 (4.8)
8-32 THD
.75 (19.1)
M4 THD
3X 1/4 (M6) CLR
.50 (12.5)
.50 (12.5)