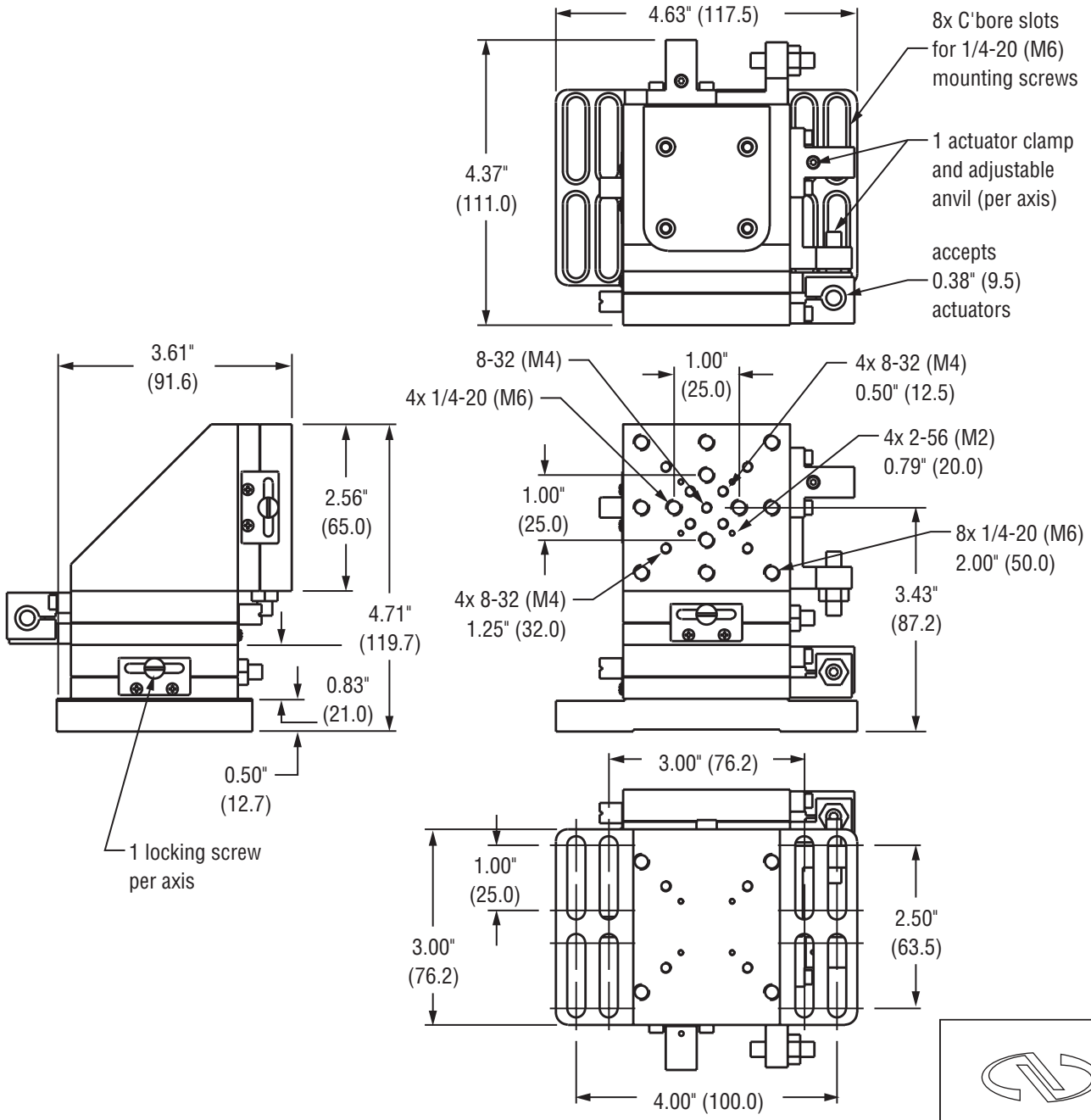
4.63" (117.5)
8x C'bore slots
for 1/4-20 (M6)
mounting screws
1 actuator clamp
and adjustable
anvil (per axis)
accepts
0.38" (9.5)
actuators
4.37"
(111.0)
3.61"
(91.6)
2.56"
(65.0)
4.71"
(119.7)
0.83"
(21.0)
0.50"
(12.7)
1 locking screw
per axis
8-32 (M4)
4x 1/4-20 (M6)
1.00"
(25.0)
4x 8-32 (M4)
0.50" (12.5)
4x 2-56 (M2)
0.79" (20.0)
1.00"
(25.0)
8x 1/4-20 (M6)
2.00" (50.0)
4x 8-32 (M4)
1.25" (32.0)
3.43"
(87.2)
3.00" (76.2)
1.00"
(25.0)
3.00"
(76.2)
2.50"
(63.5)
4.00" (100.0)

Newport