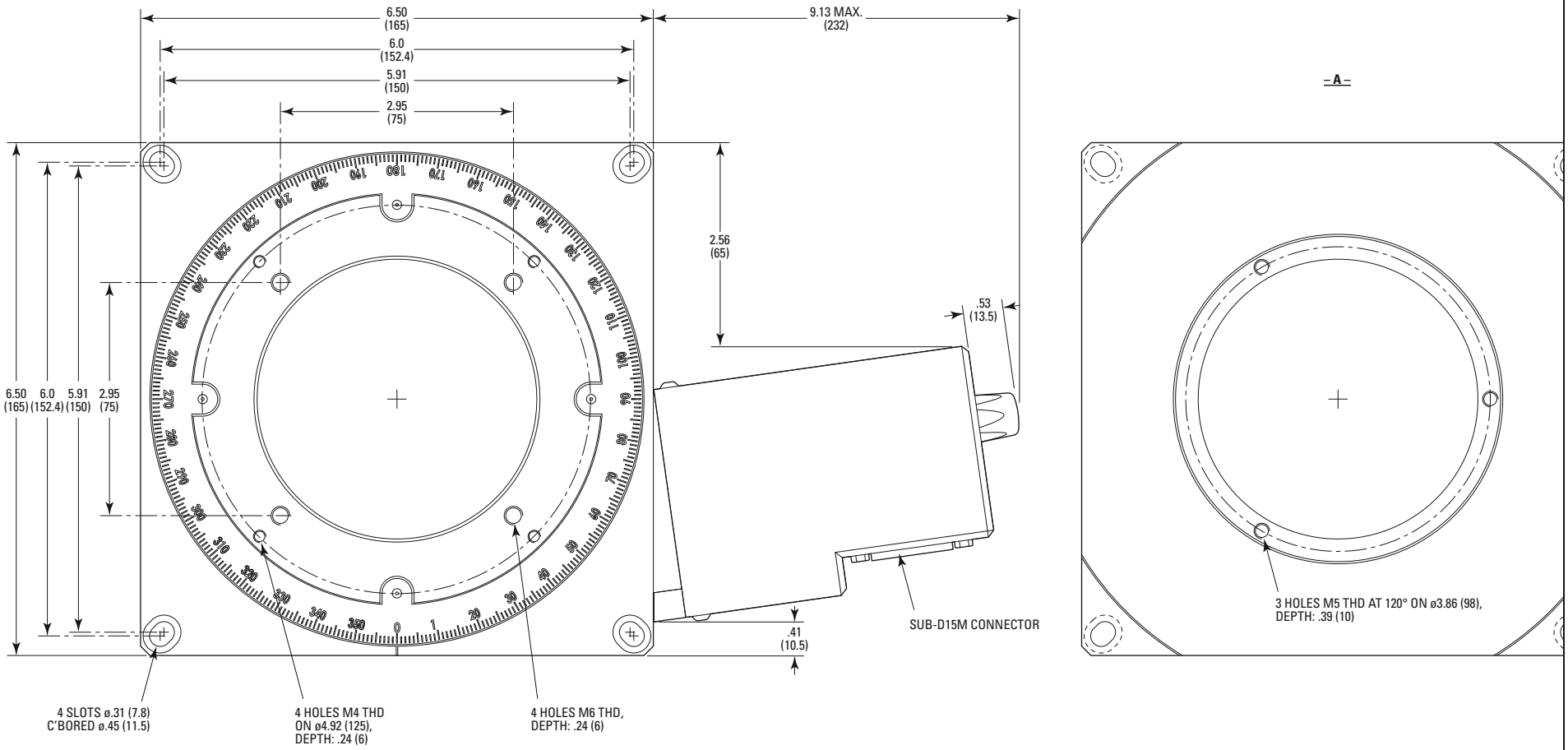

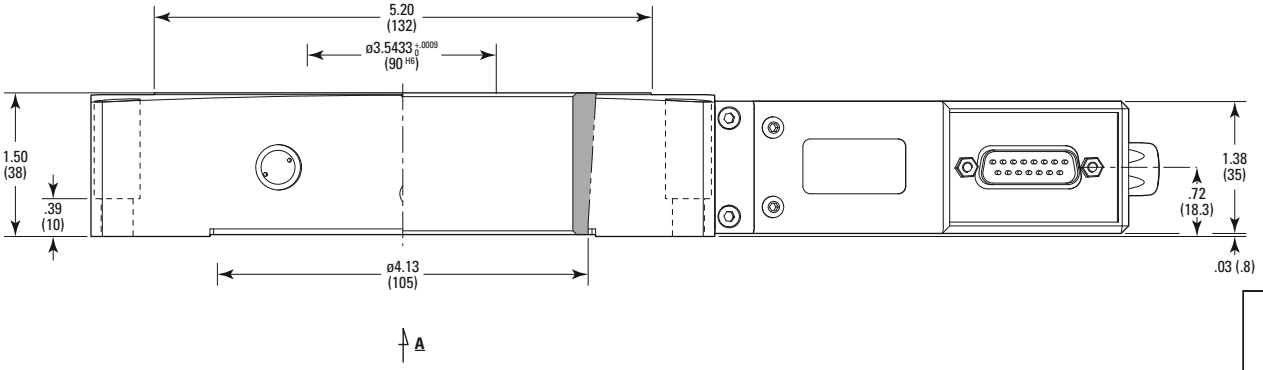

MODEL SHOWN: URS150BCC

DIMENSIONS IN INCHES (AND MILLIMETERS)

0 1.0 2.0 IN.

0 10 20 30 40 50 (MM)

SCALE 1÷2

Newport