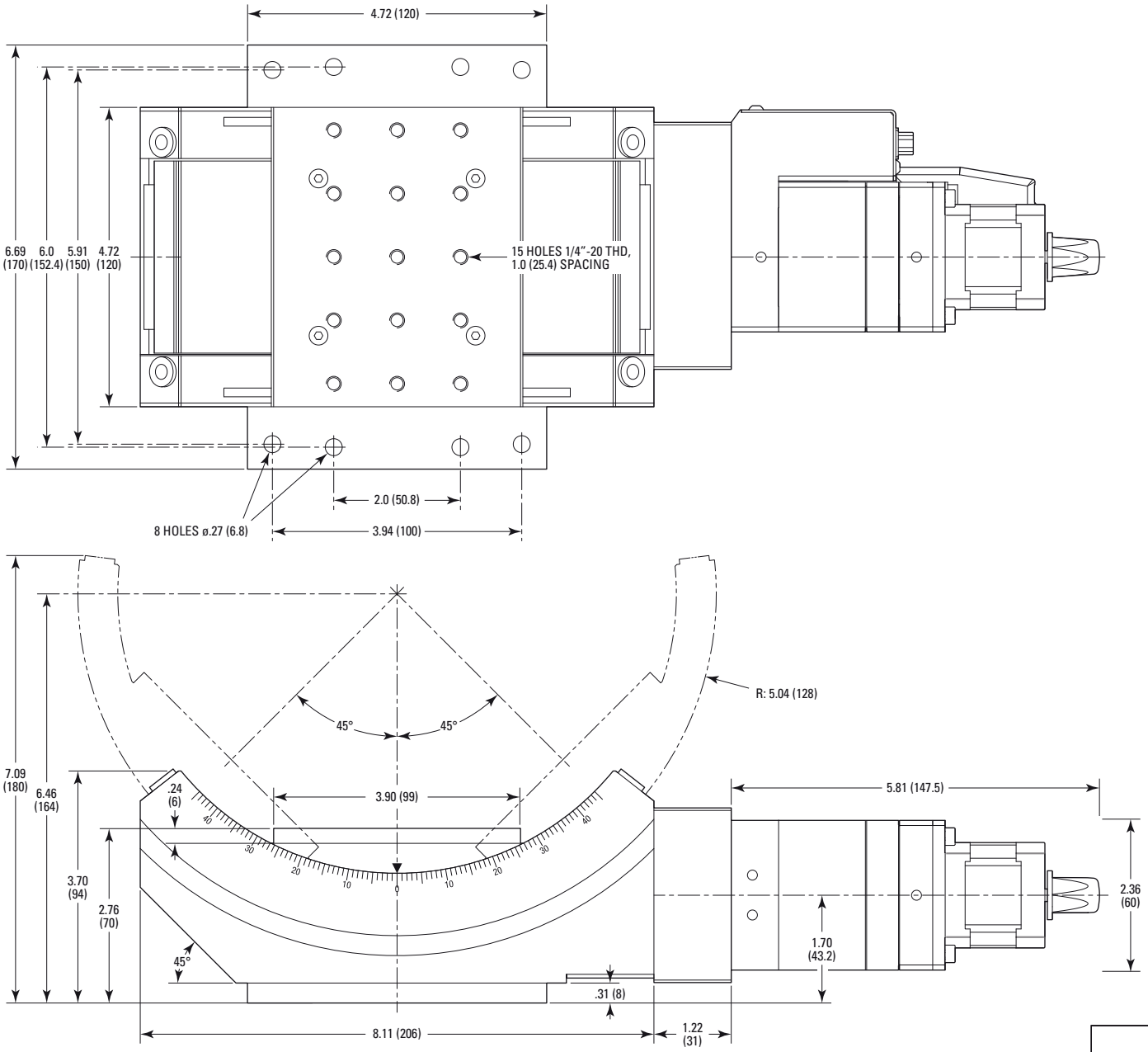

MODEL SHOWN: BGM120BPE

DIMENSIONS IN INCHES (AND MILLIMETERS)

0 1 2 IN.

0 20 40 60 (MM)

Newport