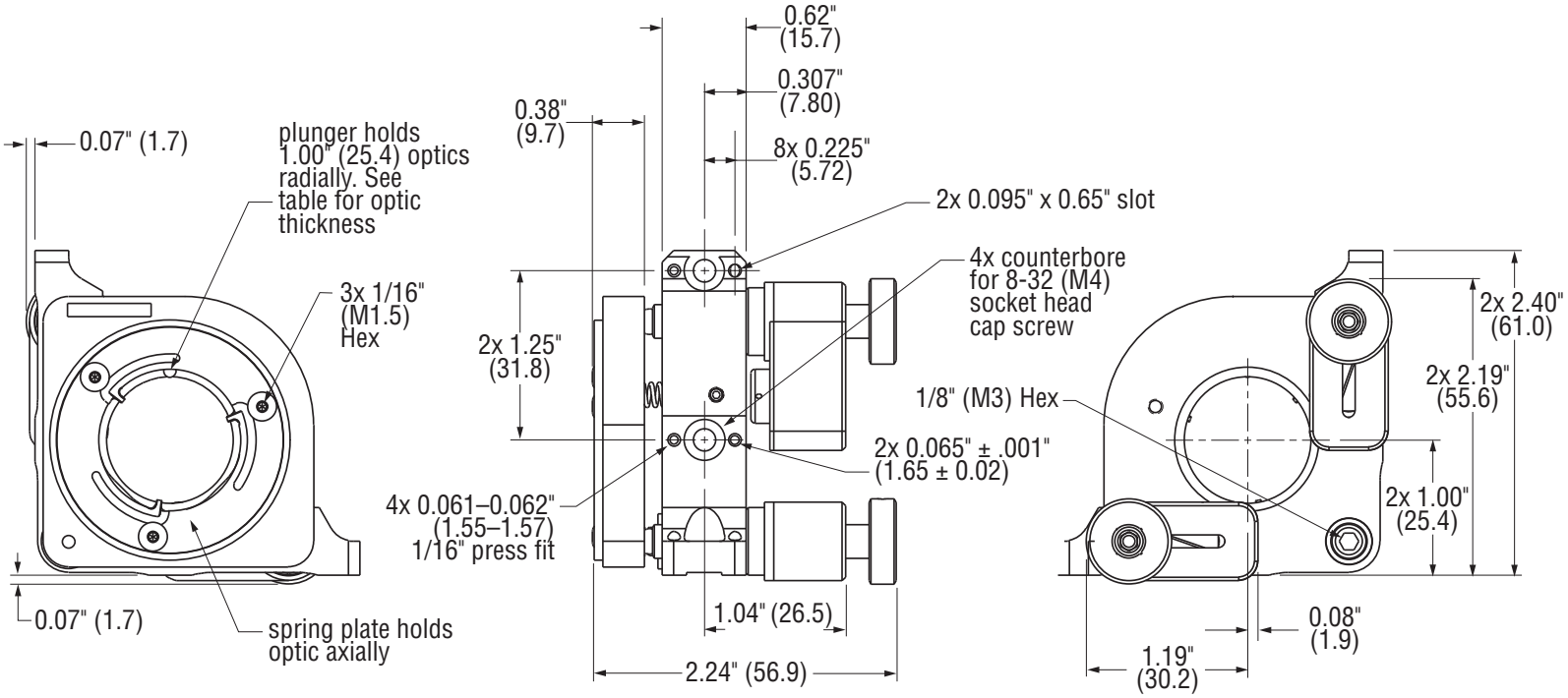
0.07" (1.7)
plunger holds 1.00" (25.4) optics radially. See table for optic thickness
3x 1/16" (M1.5) Hex
0.07" (1.7)
spring plate holds optic axially
0.62" (15.7)
0.307" (7.80)
0.38" (9.7)
8x 0.225" (5.72)
2x 0.095" x 0.65" slot
4x counterbore for 8-32 (M4) socket head cap screw
2x 1.25" (31.8)
2x 0.065" ± .001" (1.65 ± 0.02)
4x 0.061–0.062" (1.55–1.57) 1/16" press fit
1.04" (26.5)
2.24" (56.9)
2x 2.40" (61.0)
2x 2.19" (55.6)
1/8" (M3) Hex
2x 1.00" (25.4)
0.08" (1.9)
1.19" (30.2)

New Focus™